# 1.2.1 Assembly Instruction

This lesson takes the installation of miniArm starter kit as an example. The installation method is also applicable to other versions.

1) Mount the servo onto its fixing plate using four M4*14 round-head screws and four M4 nuts.

Note: when installing, make sure the servo horn is positioned away from the side with the arc-shaped slots.

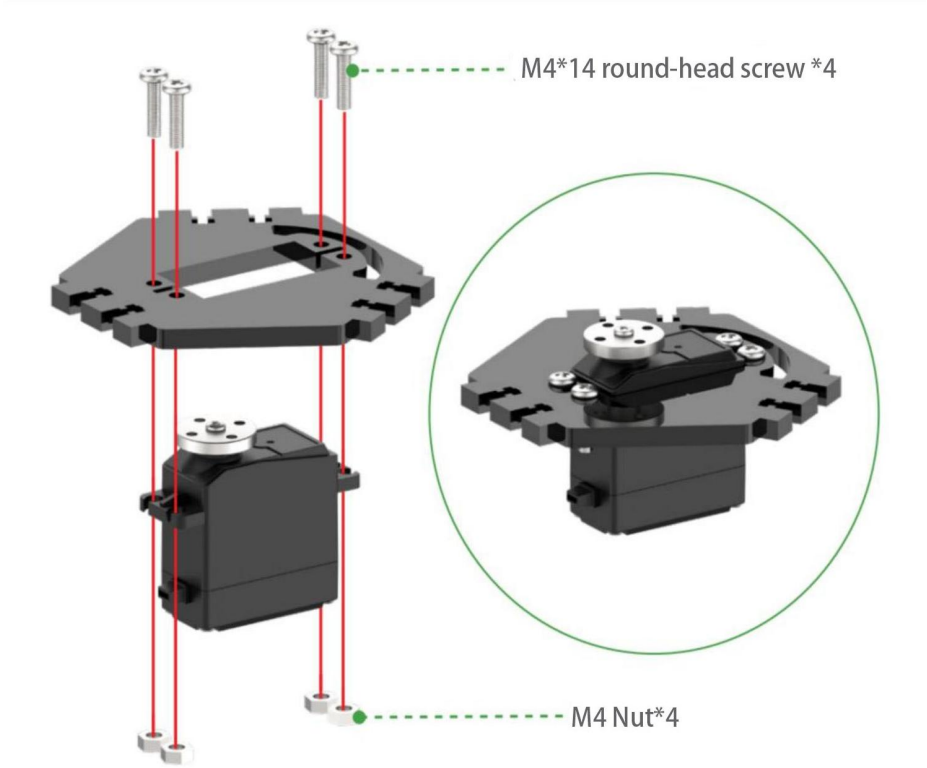


2) Attach the square plate to the servo fixing plate using two M3*10 flat-head screws and two M3 nuts. The remaining two square plates are installed in the same way.

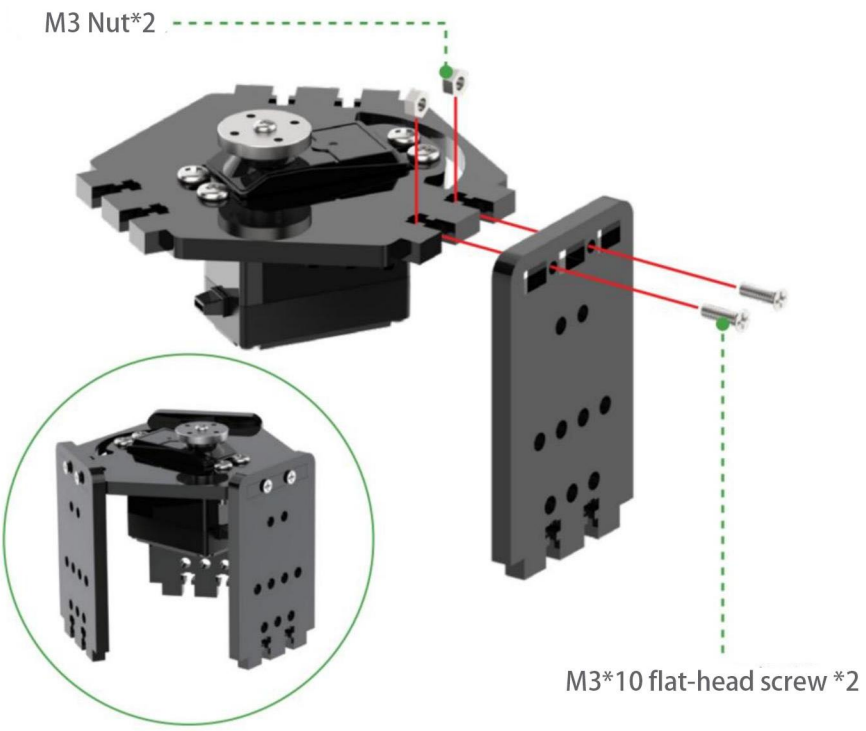


3) Use six M3*10 flat-head screws and six M3 nuts to secure the square plates to the main base plate. Then, use six M3*10 flat-head screws to attach six M3*8 double-pass nylon standoffs to the underside of the main base plate.

Note: The side of the main base plate with fewer holes should be positioned on the right side of the robotic arm (from the robotic arm's first-person perspective)

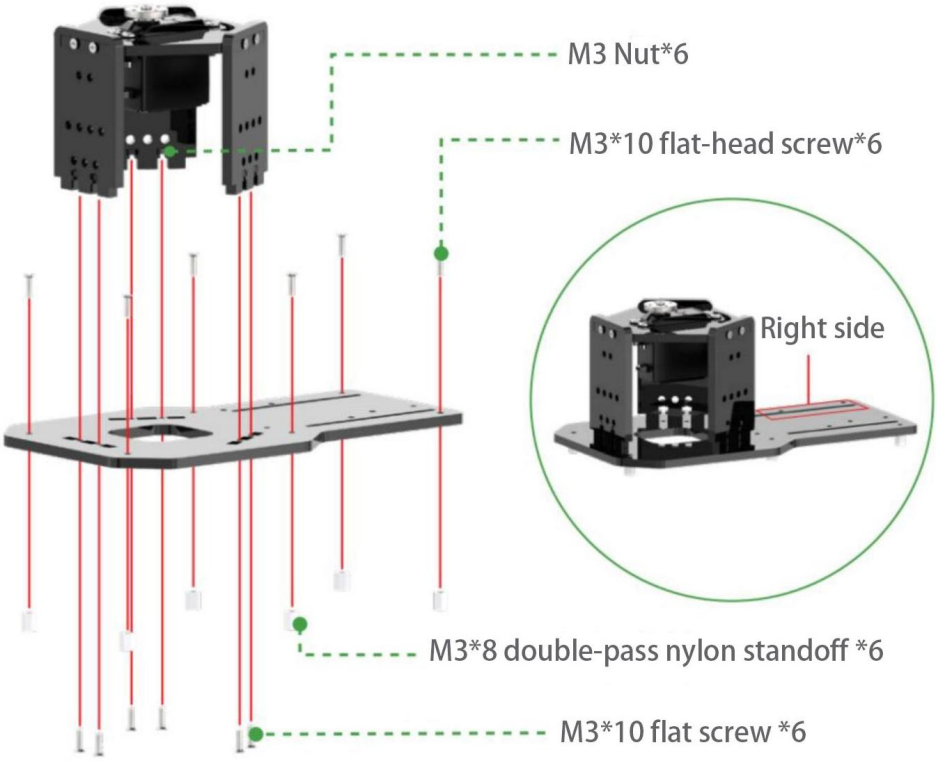


4) Use four M3*6 round-head screws to attach four M3*15 double-pass brass standoffs to the Arduino UNO board. Then, use four M3*10 flat-head screws to secure the board to the base plate.

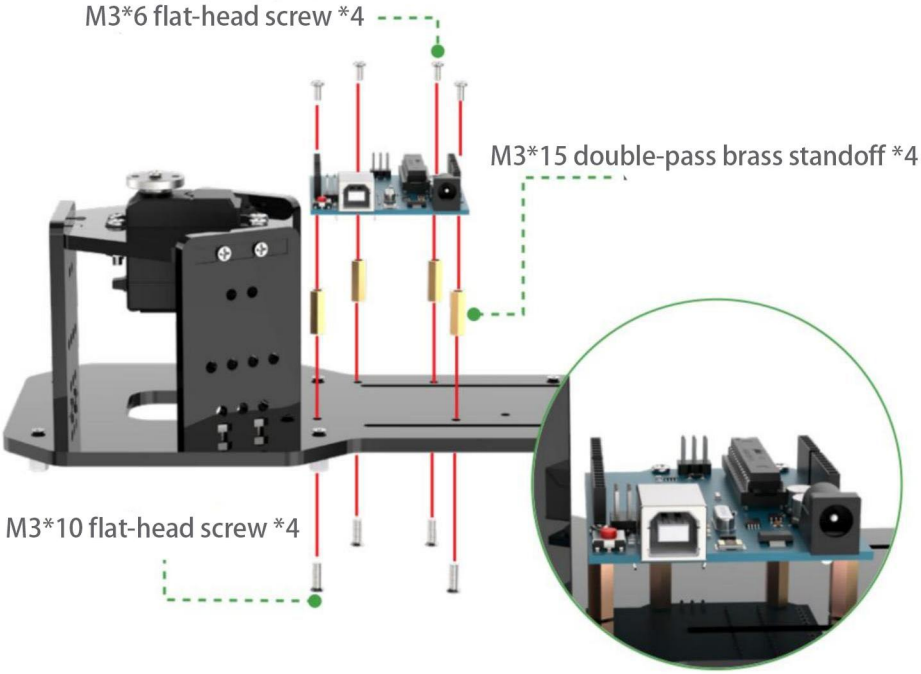


5) Align the pins on the expansion board with the socket connectors of the board and insert them into the board one by one.

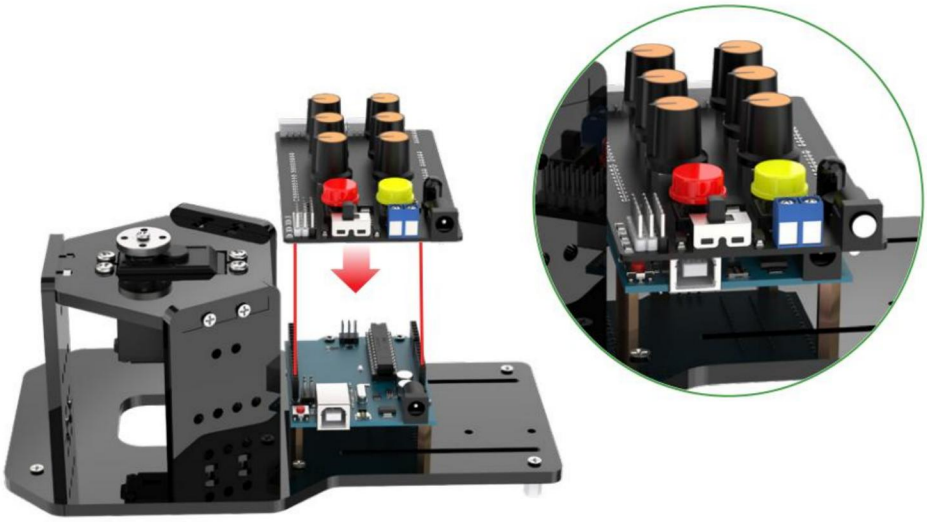

6) Use four M3*10 flat-head screws and four M3 nuts to mount the battery holder onto the main base plate.

Before inserting the batteries, please make sure the switch on the battery holder is set to "OFF." Then insert the batteries and connect the power cable to the DC port on the expansion board.

**Note: Two of the mounting holes are positioned within the slots on the main base plate.**

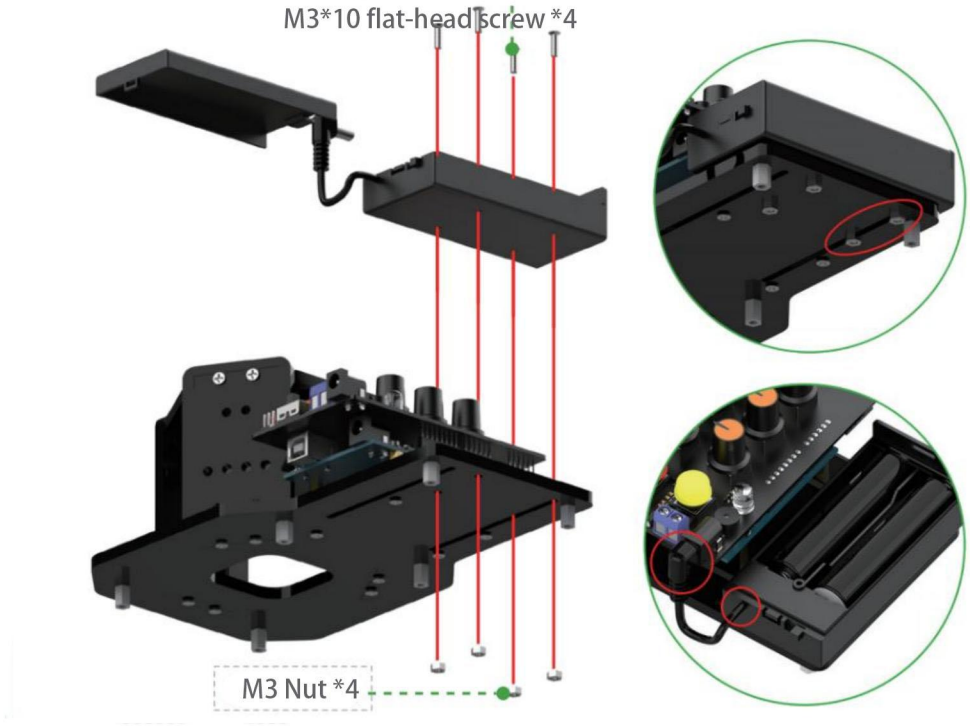


7) Connect the pan-tilt servo to any servo port (white wire to S — signal, red wire to +, black wire to -), then power on the robotic arm to reset the servo to the initial position.
After the servo resets, use four M2*6 round-head screws to attach the U-shaped bracket onto the servo horn.
(Note: When installing, ensure the bottom of the U-shaped bracket is parallel to the base.)

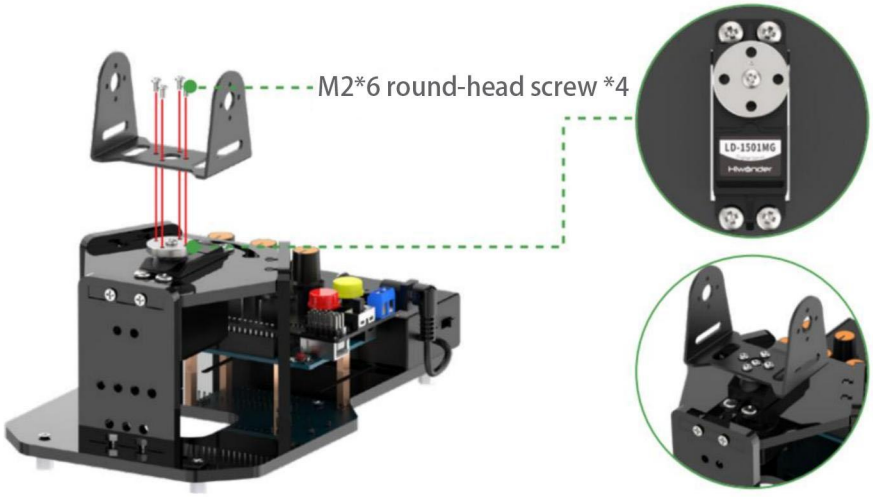


8) Connect servo No.4 to any servo port on the expansion board (white wire to S — signal, red wire to +, black wire to -).
Power on the robotic arm to allow the servo to move to the center position. Once centered, insert the robotic arm straight into the U-shaped bracket on the base.

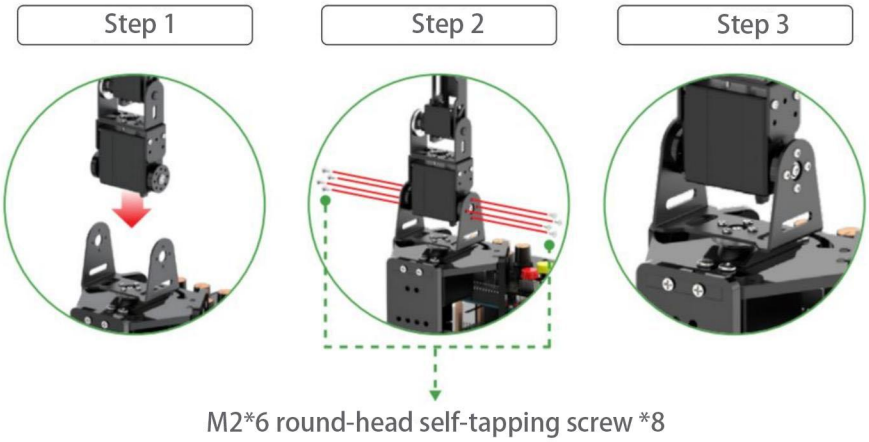


9) Note: Do not reverse the servo power polarity.
For ports 1 to 3: orange wire to S (signal), red wire to +, brown wire to -;
For ports 4 and 5: white wire to S (signal), black/red wire to +, black wire to -.

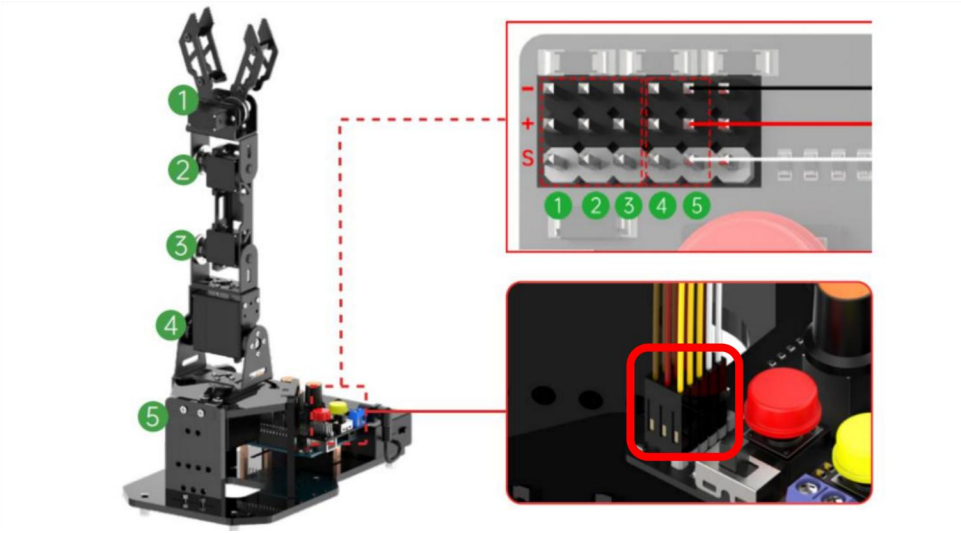

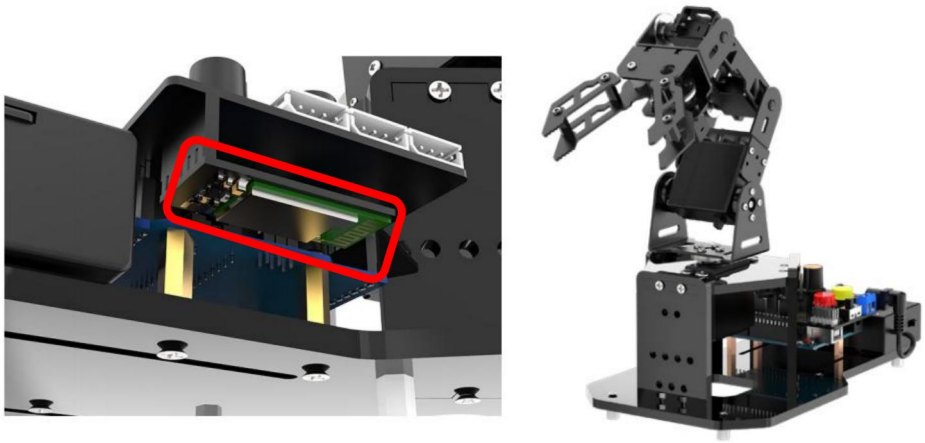
10) Align the Bluetooth module's header pins with the corresponding female headers on the expansion board, then connect the Bluetooth module to the interface.